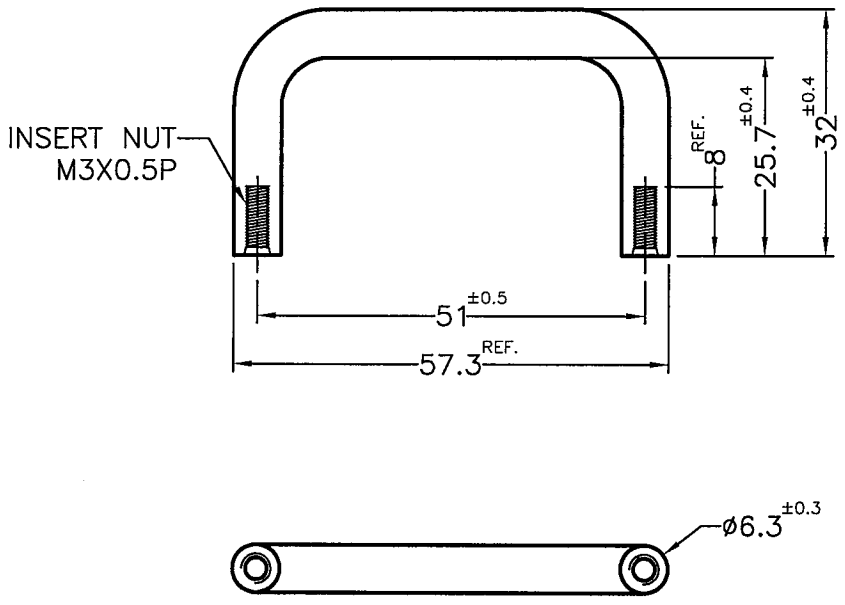

PART NO.	MATERIAL	COLOR
HANU-51NV0(B)	NYLON 66 UL94V-0+GF	BLACK
HANU-51NV0(G)		CISCO MEDIUM GRAY
HANU-51N(B)	NYLON 66 UL94HB+GF	BLACK
HANU-51N(GR)		GREEN(PANTONE 369C)

NOTE: 1. THE COLOR BATCH TEST REPORT IS ONLY FOR FIRST LOT TEST.
色母環保檢測報告,僅提供原始測試報告.
2. SHRINKING IS NORMAL STATUS.
內縮屬正常現象.
3. MADE OF EQUIVALENT MATERIAL.
可使用同等材質.

KANG YANG
康揚企業股份有限公司
2023-12-13
工程部
R&D

康揚企業股份有限公司
KANG YANG HARDWARE ENTERPRISE CO., LTD.
康揚塑膠(東莞)有限公司
KANG YANG PLASTIC(DONG GUAN)CO.,LTD.
康哲電腦配件(吳江)有限公司
KANG CHE COMPUTER COMPONENTS(WUJIANG)CO.,LTD.
ISO 9001
ISO 14001
QC 080000
IATF 16949

PROPRIETARY AND CONFIDENTIAL
THE INFORMATION CONTAINED IN THIS DRAWING IS THE SOLE PROPERTY OF KANG YANG HARDWARE ENTERPRISE CO. ANY REPRODUCTION IN PART OR AS A WHOLE WITHOUT THE WRITTEN PERMISSION OF KANG YANG HARDWARE ENTERPRISE CO. IS PROHIBITED.

DO NOT SCALE DRAWING

DATE 2005.11.01	TITLE HANDLE		DWG. NO. HANU-51	PART NO. SEE ABOVE
DRAWN Linda	MATERIAL SEE ABOVE			
CHECKED 林祺翔	COLOR BLACK	NUT MATERIAL BRASS	SIZE A4	SPEC. DWG. REV D
APPROVED Kang	UNLESS OTHERWISE SPECIFIED TOLERANCE: SEE ABOVE		SCALE: 1:1	UNIT mm SHEET 1 OF 1