G-NOR ELECTRONICS CO.,LTD.

GNL-3034xx
(Φ3mm ROUND TYPE)
Ultra Brightness

ABSOLUTE MAXIMUM RATING:(Ta=25℃)

Parameter			Unit
DC Forward Current	30		mA
Reverse Voltage	5		V
Reverse Current (Vr-5V)	10		μA
Peak Forward Current ,tw ,=1 msec Duty ,=1/20	150		mA
Operation Temperature	-40	+80	℃
Storage Temperature	-40	+100	℃
Solder Dip (5 seconds,1.6mm from body) Temperature	300	±5	℃

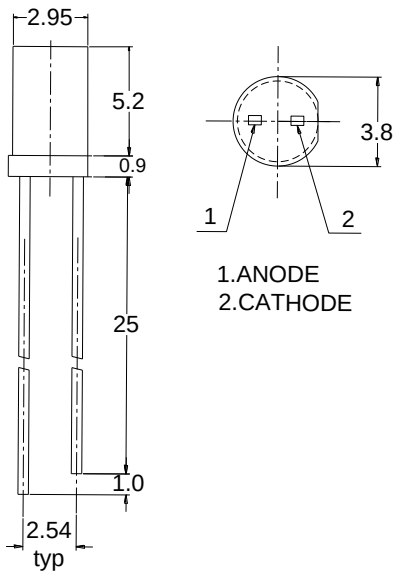

Part Number	EMITTED COLOR		Lens Color	Peak Wavelength (nm)	Vf (v) Typ.	IV (If=20mA) mcd		View Angle 2θ1/2
						Min.	Typ.	
GNL-3034HD	GaP	RED	Red Diffused	700	2.1	1.3	5	100°
GNL-3034GD	GaP	GREEN	Green Diffused	565	2.1	5	15	100°
GNL-3034YD	GaP	YELLOW	Yellow Diffused	585	2.1	5	15	100°